Gas Spring

FU LUONG

HI-TECH CO., LTD.

Tel: 886-6-581-3380
Fax: 886-6-581-3387
http://m.cens.com/s/fuluong

FU LUONG HI-TECH CO., LTD. was set in the Yong-Kang Industrial Park in1963. Under the circumstances of constant expansion of the enterprise scale, and the factory and assembly line failed to meet the rapidly growing requirement, FU LUONG put in a great amount of money in 2000 to move the whole factory to Hsimei Village, Shanhua Town. Taking bicycle components, automobile and military-use cylinder, office furniture gas spring and bicycle shock absorbers as its main products.

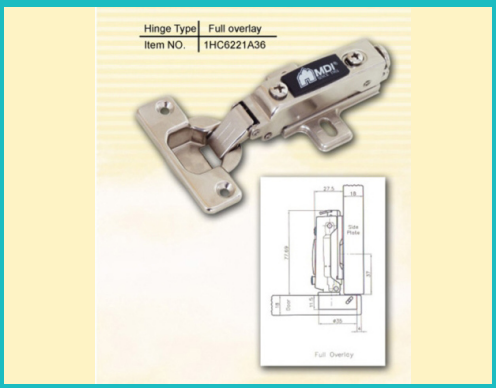

Full Overlay

Pneumatic Of Concealed Hinge

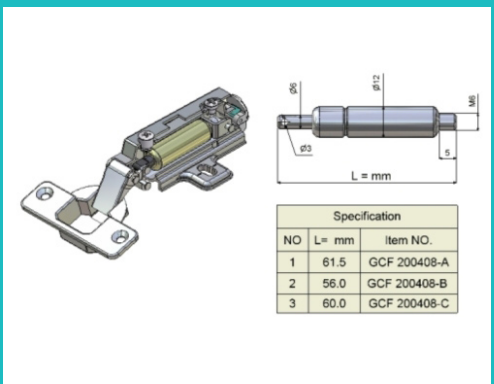

Gas Spring Of Hinge