加工精度	

E77GR-4(E)

- Manually Lock Cuttr
- Manually Rotate Angular

Pull Stud Select		
		BT(M24X3.0)
		NT(M24X3.0)
		NT(1")

Accessories:
Screw M20XP2.5X110L X8
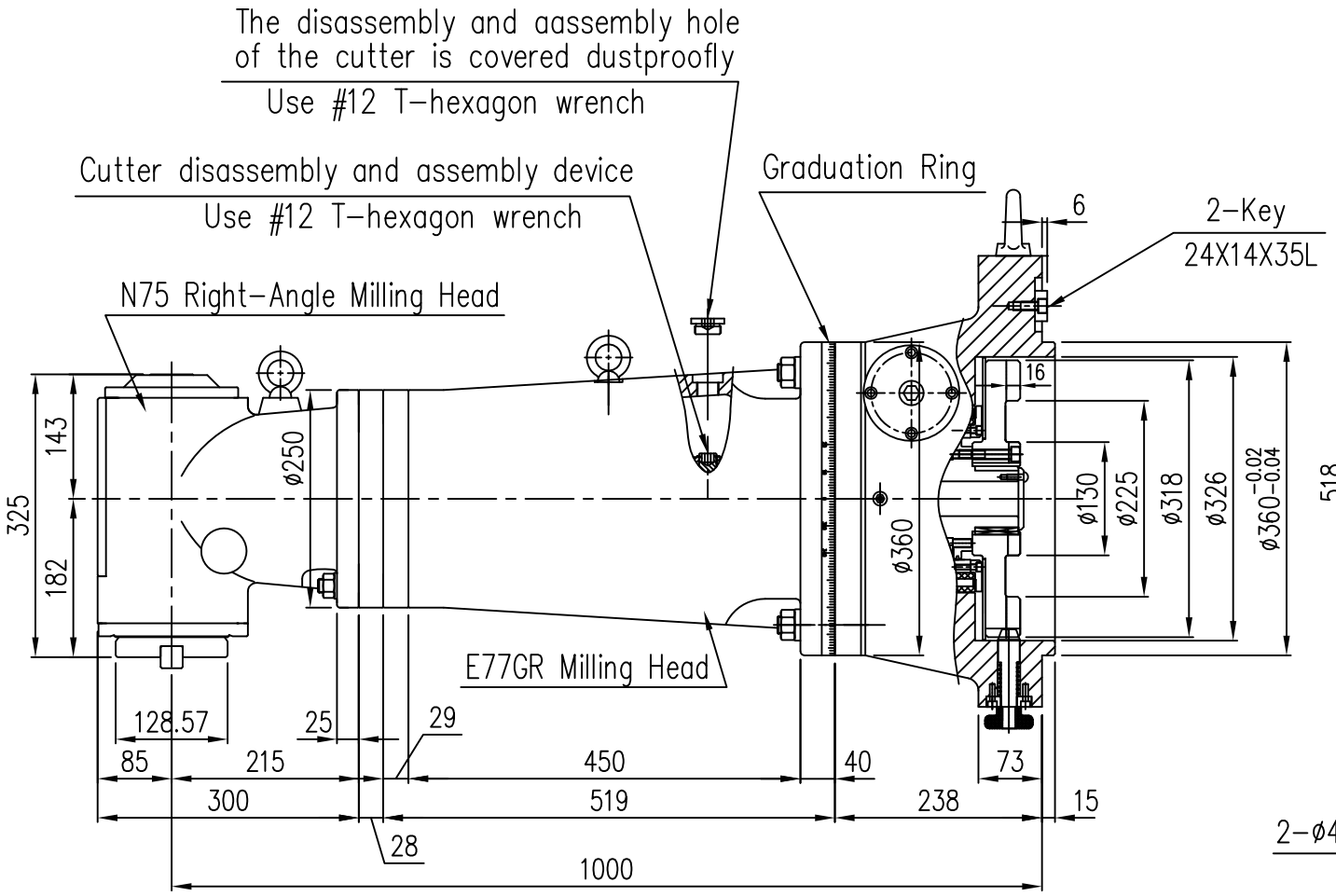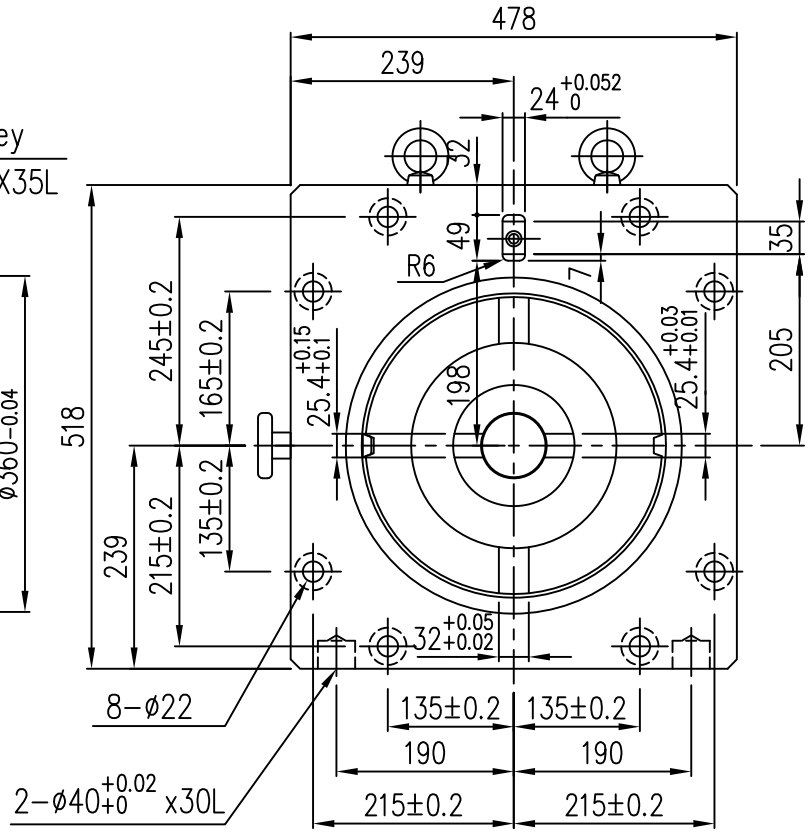
E77GR+N75 STANDARD	
Max Cutter Dia	ø150(6")
Reduction Ratio	1 : 1
Max Torque	1000 N.m
Max Power	38kw
Max Revolving	1000RPM
Main Spindle Steering	Righ Turn