加工精度	

C60GR-1(E)

Pull Stud Select		
		BT(M24X3.0)
		NT(M24X3.0)
		NT(1")

Accessories :Screw X8
M20XP2.5X130L

Max Cutter Dia	ø200(8")	Max Revolving	1000RPM
Reduction Ratio	1 : 1	Main Spindle Steering	Righ Turn
Max Power	55kw	Lubricant Type	Grease
Max Torque	2000N.m		
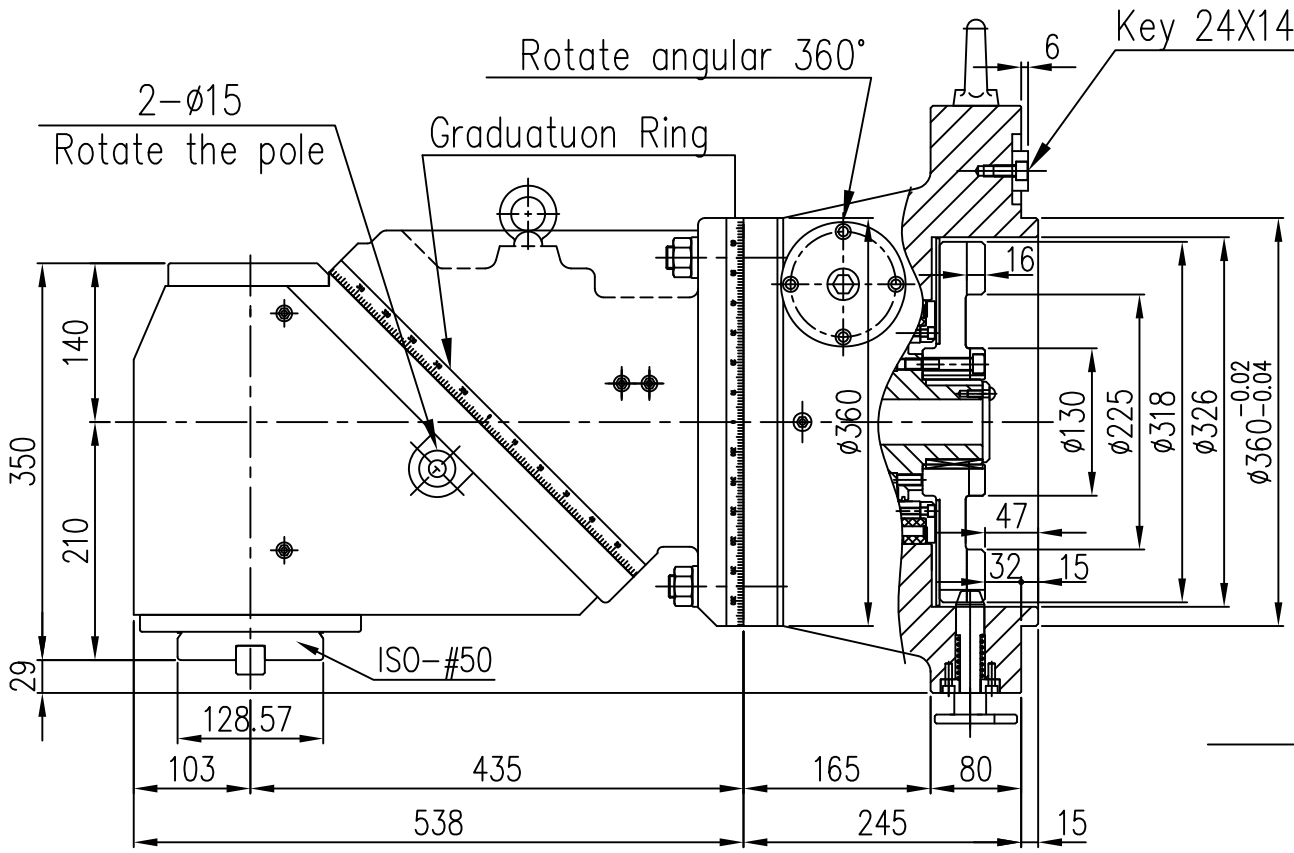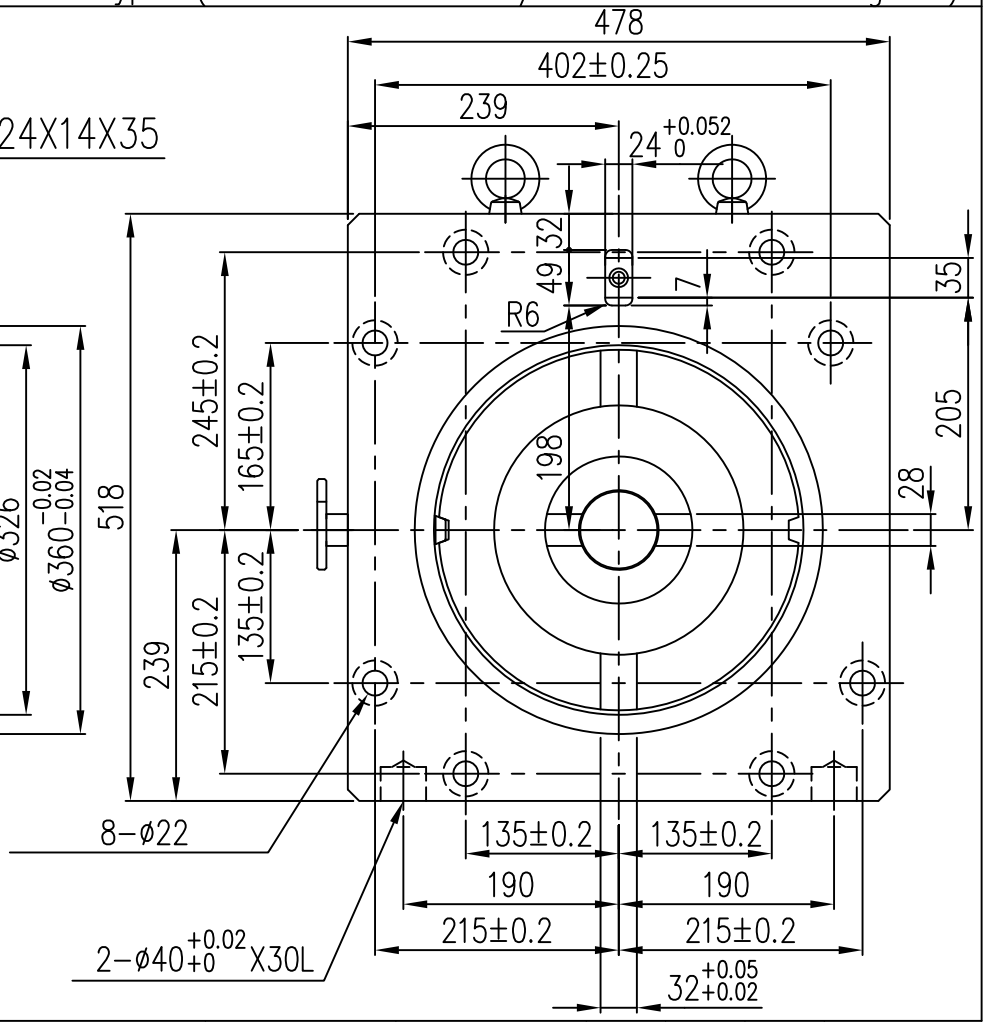
Horizontal Type (Manual Draw Bar / Manual Rotate angular)